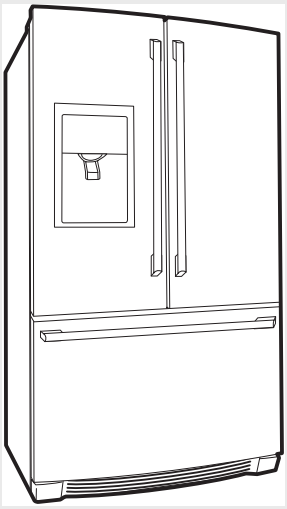

FRIGIDAIRE

Factory Parts Catalog

Product No.	FGUB2642LE0	FGUB2642LE1	FGUB2642LF0	FGUB2642LF1	FGUB2642LP0	FGUB2642LP1
Series	Gallery FDBM	Gallery FDBM	Gallery FDBM	Gallery FDBM	Gallery FDBM	Gallery FDBM
Color	black (smooth)	black (smooth)	stainless	stainless	white (smooth)	white (smooth)
Volts	115	115	115	115	115	115
Owner's Guide	242046800	242046800	242046800	242046800	242046800	242046800
Market	North America	North America	North America	North America	North America	North America
Energy Guide	242110215	242110215	242110215	242110215	242110215	242110215
Service Data Sheet	240389643	240389643	240389643	240389643	240389643	240389643
Installation Instructions	242046900	242046900	242046900	242046900	242046900	242046900

Frigidaire
P.O. BOX 8020
CHARLOTTE, NC 28262

Publication No.
5995575205
10/09/27
(EN/SERVICE/KHB)
137

FRENCH DOOR BOTTOM FREEZER/REFRIGERATOR W/DISPENSER

Model No.
FGUB2642L

FREEZER DRAWER, BASKETS

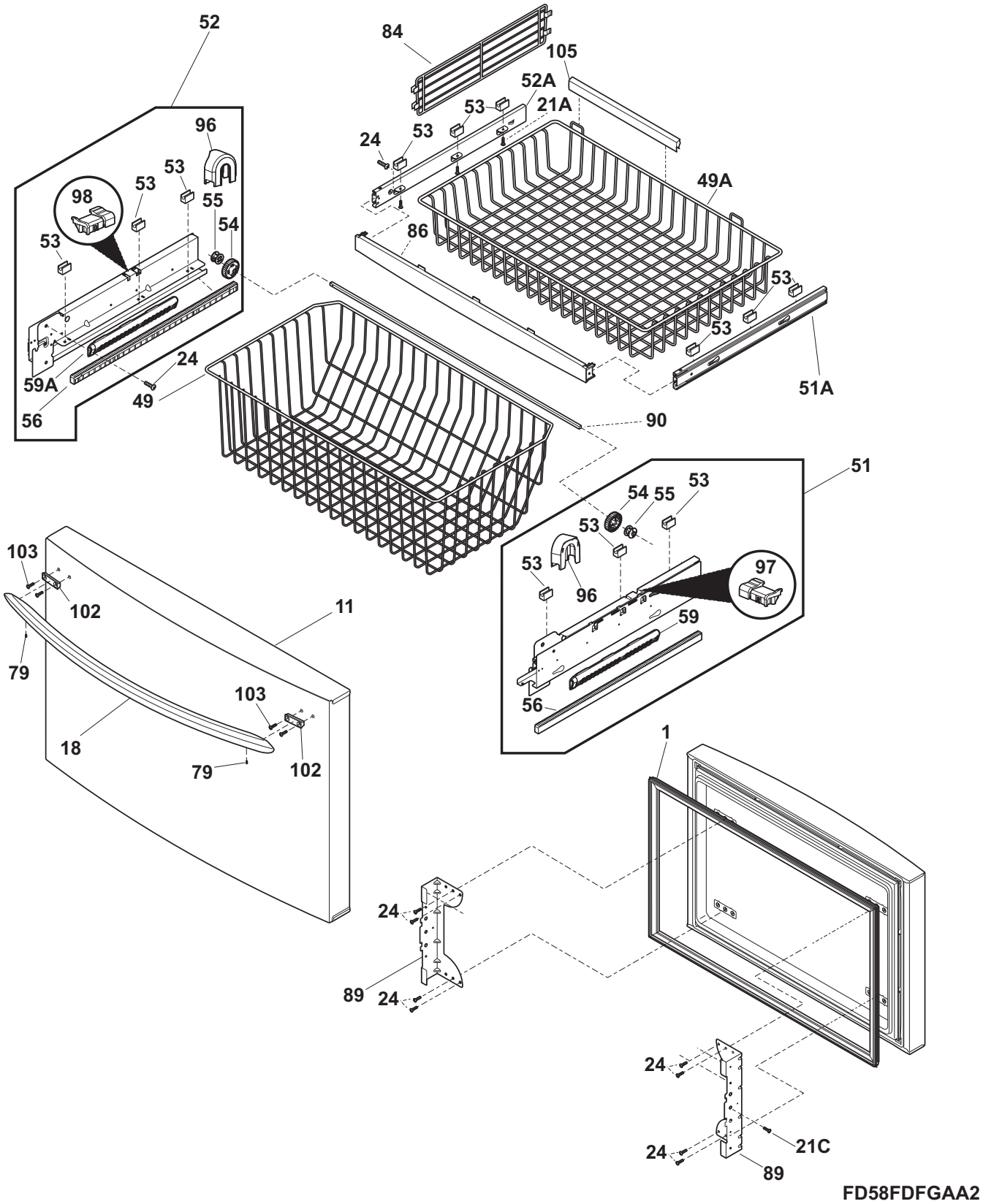

FREEZER DRAWER, BASKETS

Model Index:
A FGUB2642L (FGUB2642LE0)
B FGUB2642L (FGUB2642LE1)
C FGUB2642L (FGUB2642LF0)
D FGUB2642L (FGUB2642LF1)
E FGUB2642L (FGUB2642LP0)
F FGUB2642L (FGUB2642LP1)

POS. NO	PART NO.							DESCRIPTION
1 #	241778304	A	B	-	-	-	-	Gasket-frzr drawer, black, magnetic
1 #	241778308	-	-	C	D	-	-	Gasket-frzr drawer, gray, magnetic
1 #	241778302	-	-	-	-	E	F	Gasket-frzr drawer, white, magnetic
11	241987914	A	B	-	-	-	-	Door-frzr, black (smooth), complete assy
11	241987916	-	-	C	D	-	-	Drawer, stainless, freezer
11	241987913	-	-	-	-	E	F	Door-frzr, white, complete assy
18	242029403	A	B	-	-	-	-	Handle-door, black
18	242029401	-	-	C	D	-	-	Handle-frzr basket
18	242029402	-	-	-	-	E	F	Handle-door, white
18*	241601001	A	B	C	D	E	F	Wrench, allen
18*	241701901	A	B	C	D	E	F	Screw Driver
21A	241953902	A	B	C	D	E	F	Screw, #8 - 18 X .380, 3
21C	241899703	A	B	C	D	E	F	Screw, truss head, #10-32 x 1/4, zinc
24	240383406	A	B	C	D	E	F	Screw, truss hd quad, #10-16 x .500, zinc
49	242026802	A	B	C	D	E	F	Basket-frzr, lower
49A	241780809	A	B	C	D	E	F	Basket-frzr, upper
51	241883601	A	B	C	D	E	F	Slide Assembly, basket lower, RH, freezer drawer
51*	242039701	A	B	C	D	E	F	Screw
51A	241894201	A	B	C	D	E	F	Slide Assembly, basket, RH, freezer drawer
52	241883701	A	B	C	D	E	F	Slide Assembly, basket lower, LH, freezer drawer
52A	241894203	A	B	C	D	E	F	Slide Assembly, basket, LH, freezer drawer
53	241824201	A	B	C	D	E	F	Retainer-basket
54	241770201	A	B	C	D	E	F	Pinion
55	241770301	A	B	C	D	E	F	Pinion-idler
56	241762801	A	B	C	D	E	F	Rack, drawer travel
59	241979702	A	B	C	D	E	F	Closure, drawer
59A	241979701	A	B	C	D	E	F	Closure, drawer
79	218755407	A	B	C	D	E	F	Screw-set, 10-32 x 0.500
84	241780901	A	B	C	D	E	F	Divider, basket, upper
86	242090701	A	B	C	D	E	F	Bar-stabilizer, freezer drawer
86*	241812202	A	B	C	D	E	F	Magnet, freezer drawer
89	241972301	A	B	C	D	E	F	Bracket-freezer drawer
89*	241899601	A	B	C	D	E	F	Screw, hex whd, 1/4-20 x 3/8", connects frz, rails to door, (4)
89*	241979601	A	B	C	D	E	F	Bumper, rubber
90	241770703	A	B	C	D	E	F	Bar-timing
90*	242011101	A	B	C	D	E	F	Pin-lock
96	241973501	A	B	C	D	E	F	Cover, pinion, white
97	241926401	A	B	C	D	E	F	Actuator, RH, white, light
98	241926402	A	B	C	D	E	F	Actuator, LH, white, light
102	242029301	A	B	C	D	E	F	Block-handle mtg
103	242077301	A	B	C	D	E	F	Screw, #10 AB flat hd
105	242116801	A	B	C	D	E	F	Trim-basket

Functional Parts
* Non-Illustrated Parts

FRESH FOOD DOOR

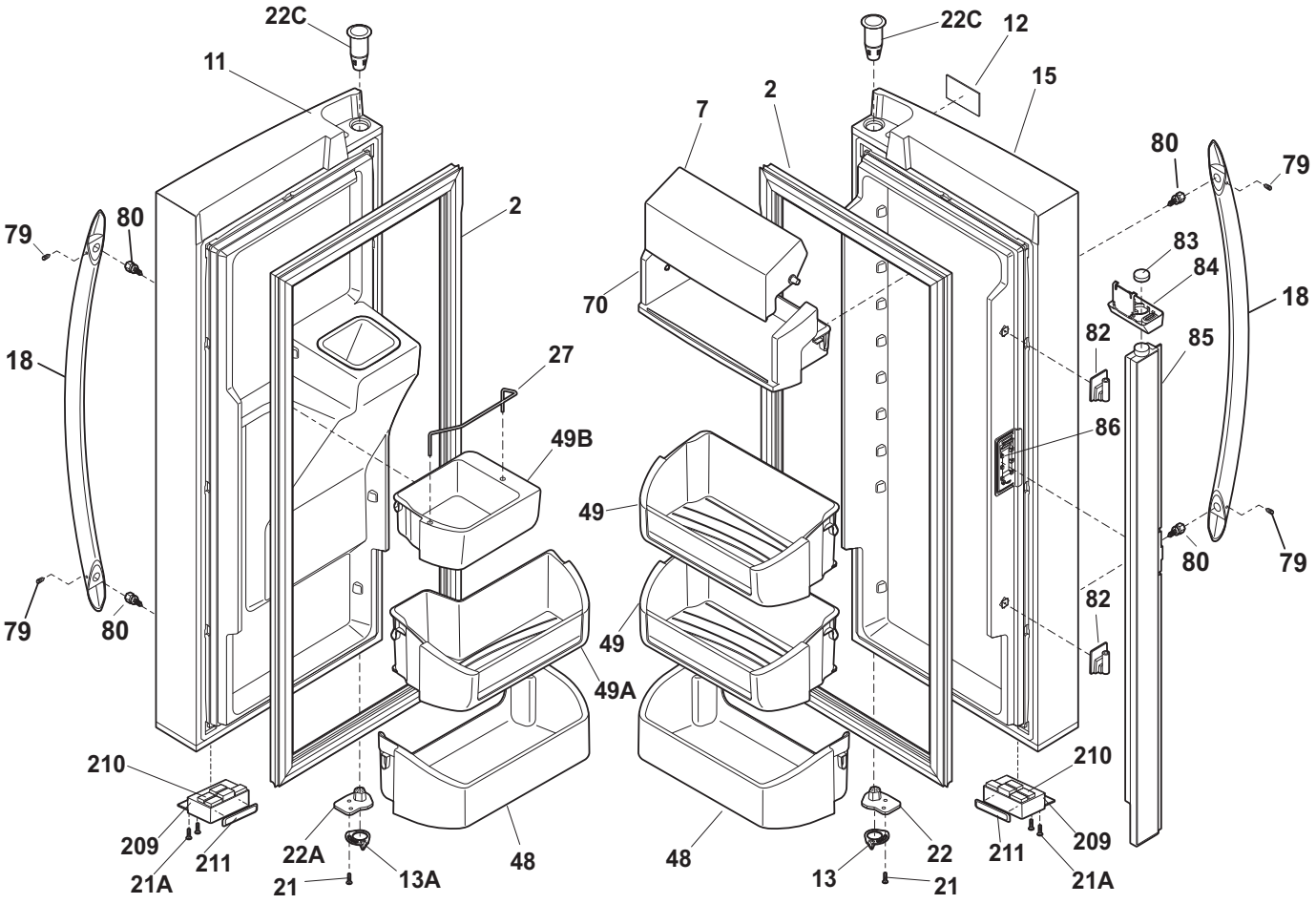

FD58RFGAAA1

FRESH FOOD DOOR

Model Index:
A FGUB2642L (FGUB2642LE0)
B FGUB2642L (FGUB2642LE1)
C FGUB2642L (FGUB2642LF0)
D FGUB2642L (FGUB2642LF1)
E FGUB2642L (FGUB2642LP0)
F FGUB2642L (FGUB2642LP1)

POS. NO	PART NO.							DESCRIPTION
2 #	241778303	A	B	-	-	-	-	Gasket-refr door, black, magnetic
2 #	241778307	-	-	C	D	-	-	Gasket-refr door, gray, magnetic
2	241778301	-	-	-	-	E	F	Gasket-door, white
7	242011401	A	B	C	D	E	F	Door-dairy, removable
11	241988043	A	B	-	-	-	-	Door-refr, smooth, black, complete assy
11	241988056	-	-	C	D	-	-	Door-refr, stainless, LH
11	241988041	-	-	-	-	E	F	Door-refr, smooth, white, complete assy
12	242015201	A	B	C	D	E	F	Label-nameplate
13	241868401	A	B	C	D	E	F	Door Stop, refrig RH, plated
13A	241868402	A	B	C	D	E	F	Door Stop, refr LH, plated
15	241988042	A	B	-	-	-	-	Door-refr, black, RH
15	241988055	-	-	C	D	-	-	Door-refr, stainless, RH
15	241988040	-	-	-	-	E	F	Door-refr, white, RH
18	241930103	A	B	-	-	-	-	Handle-door, black
18	241930101	-	-	C	D	-	-	Handle-door, stainless
18	241930102	-	-	-	-	E	F	Handle-door, white, (2)
18*	241601001	A	B	C	D	E	F	Wrench, allen
18*	241701901	A	B	C	D	E	F	Screw Driver
21	242017501	A	B	C	D	E	F	Screw, 10-32 x 0.750
21A	241953901	A	B	C	D	E	F	Screw, #8-18
22	242075601	A	B	C	D	E	F	Cam, upper hinge, RH
22A	242075602	A	B	C	D	E	F	Cam, upper hinge, LH
22C	241760401	A	B	C	D	E	F	Bearing, hinge, top
27	241752701	A	B	C	D	E	F	Retainer, tall bottle
48	242071401	-	B	-	D	-	F	Bin-door, pseudo, white
49	242011501	A	B	C	D	E	F	Bin-door, gallon
49A	242071301	A	B	C	D	E	F	Bin-door, 2-liter
49B	242011701	A	B	C	D	E	F	Bin-door, dispenser
70	241804604	A	B	C	D	E	F	Compartment-dairy, removable
79	218755408	A	B	C	D	E	F	Screw-set, 10-32 x 0.650
80	218755504	A	B	C	D	E	F	Screw-shoulder, #10 AB, handle mounting
82	241779401	A	B	C	D	E	F	Hinge-mullion, upper/lower, flipper
83	241812201	A	B	C	D	E	F	Magnet, door
84	241779701	A	B	C	D	E	F	Guide-mullion, flipper
85	241778801	A	B	-	-	E	F	Flipper mullion assembly
85	241778803	-	-	C	D	-	-	Flipper mullion assembly
85*	241788401	A	B	C	D	E	F	Harness-wiring, flipper mullion
85*	242064001	A	B	C	D	E	F	Screw
86	241779801	A	B	C	D	E	F	Hinge-mullion, center, flipper
209	242021002	A	B	-	-	-	-	Housing-magnet, black
209	242021001	-	-	C	D	E	F	Housing-magnet, white
210	241779103	A	B	C	D	E	F	Magnet, door
211	241979601	A	B	C	D	E	F	Bumper, rubber
* #	242040802	A	B	C	D	E	F	Harness-wiring, door
*	241891401	A	B	C	D	E	F	Cover-light, LED
*	242015001	A	B	C	D	E	F	Screw, #10 8-19 x 1/2
*	242068601	A	B	C	D	E	F	Bumper, RH door
*	242103001	A	B	C	D	E	F	Connector-water, straight
*	5303918371	A	B	C	D	E	F	Dispenser heater kit, 115

Functional Parts
* Non-Illustrated Parts

CABINET

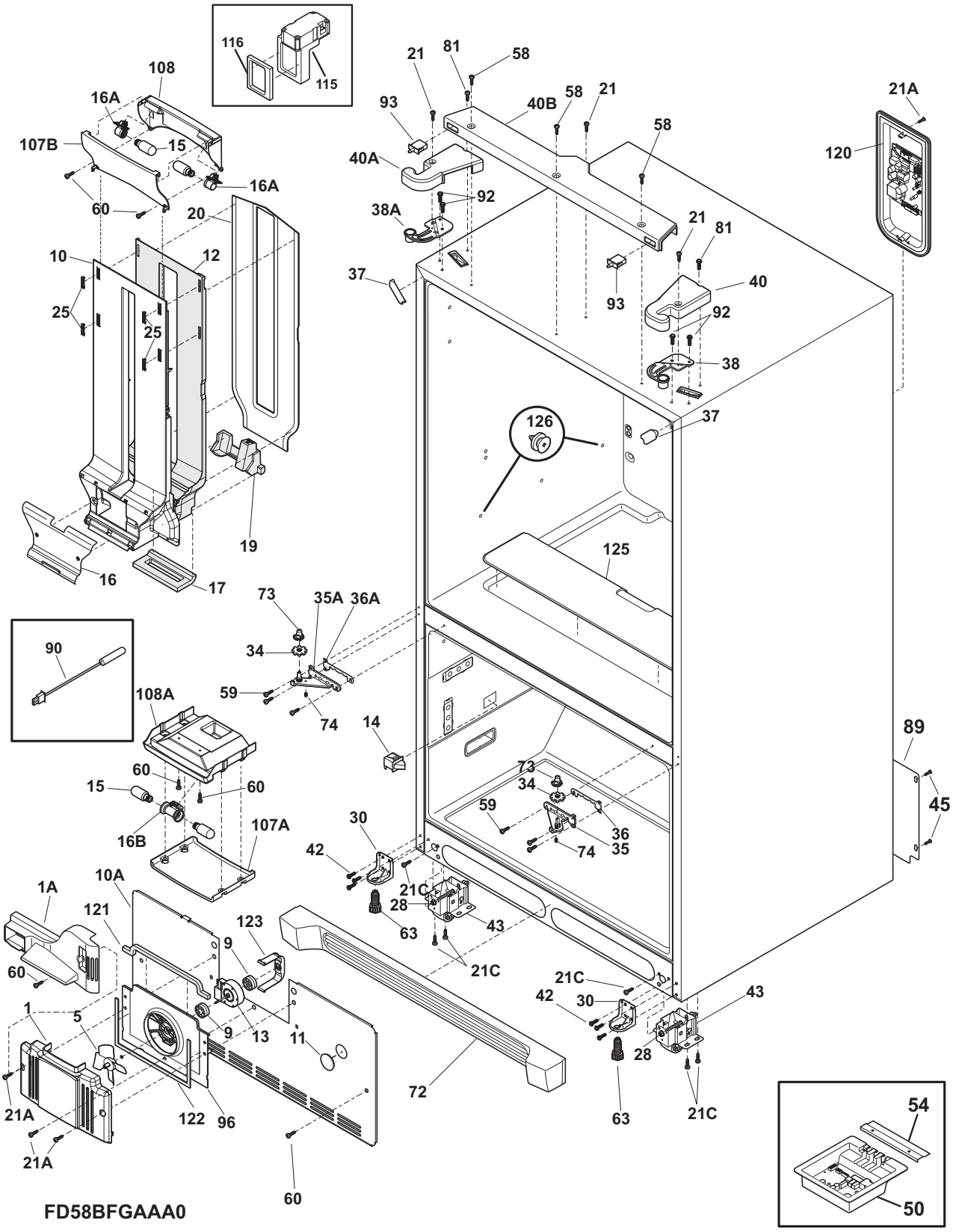
116
115
108
16A
107B
15
16A
60
20
10
12
25
25
19
16
17
21
81
58
93
40B
58
21
58
21A
120
40A
92
38A
21
81
37
93
40
92
38
37
126
125
73
35A
36A
34
59
74
90
108A
14
89
60
15
60
73
34
59
45
16B
107A
30
36
35
74
42
21C
28
43
63
10A
1A
121
123
9
60
21C
21C
42
30
43
1
5
9
13
11
28
72
21A
122
96
63
21C
21A
60
54
50
FD58BFGAAA0

CABINET

Model Index: A FGUB2642L (FGUB2642LE0)
B FGUB2642L (FGUB2642LE1)
C FGUB2642L (FGUB2642LF0)
D FGUB2642L (FGUB2642LF1)
E FGUB2642L (FGUB2642LP0)
F FGUB2642L (FGUB2642LP1)

POS. NO	PART NO.							DESCRIPTION
1	242099401	A	B	C	D	E	F	Cover-fan
1A	242052101	A	B	C	D	E	F	Duct-air
5 #	5308000010	A	B	C	D	E	F	Fan Blade, red, evaporator fan
9	241518301	A	B	C	D	E	F	Bushing, motor mounting
10	242072002	A	B	C	D	E	F	Cover-air duct
10*#	242061603	A	B	C	D	E	F	Harness-wiring, dispenser
10A	242084101	A	B	C	D	E	F	Cover-evap coil, lower
11	5303208309	A	B	C	D	E	F	Plug-hole, factory test
12	242072401	A	B	C	D	E	F	Insulation-air duct
13	241509402	A	B	C	D	E	F	Motor, evaporator fan
13*	215474201	A	B	C	D	E	F	Washer, "slinger", nylon, evap fan shaft
14	242060201	A	B	C	D	E	F	Switch-light/lamp, frzr door
15	241552801	A	B	C	D	E	F	Light Bulb
16	242072101	A	B	C	D	E	F	Cover-damper
16*	241953904	A	B	C	D	E	F	Screw, #8-18
16*	242072501	A	B	C	D	E	F	Cover-EPS, damper
16A	240590401	A	B	C	D	E	F	Socket-light, top & mid
16A*	241969202	A	B	C	D	E	F	Harness-wiring, top light
16B	240590402	A	B	C	D	E	F	Socket-light, top & mid
16B*	241510802	A	B	C	D	E	F	Harness-wiring, frz light
17	242071901	A	B	C	D	E	F	Gasket-air duct/liner
19	242072601	A	B	C	D	E	F	Support-EPS damper
20	242072201	A	B	C	D	E	F	Cover-air duct, rear
21	241732101	A	B	C	D	E	F	Screw, 10-32 x 1/2
21A	241953901	A	B	C	D	E	F	Screw, #8-18
21C	218252201	A	B	C	D	E	F	Screw, #8 truss hd, 10-32CA x 0.500
25	241949502	A	B	C	D	E	F	Clip, air vent
28	240335502	A	B	C	D	E	F	Bolt-roller adj, hex washer head, 1/4-20 x 4.020, (2), special
30	241778701	A	B	C	D	E	F	Bracket-anti tip
34	241868301	A	B	C	D	E	F	Washer, hinge, nylon, (2)
35	241763005	A	B	C	D	E	F	Hinge-lower, RH
35A	241763006	A	B	C	D	E	F	Hinge-lower, LH
36	241868201	A	B	C	D	E	F	Spacer, door, lower RH
36A	241868202	A	B	C	D	E	F	Spacer, door, lower LH
37	240337610	A	B	-	-	-	-	Trim-cabinet corner, black, (2)
37	240337615	-	-	C	D	-	-	Trim-cabinet corner, gray, (2)
37	240337608	-	-	-	-	E	F	Trim-cabinet corner, white, (2)
38	241761301	A	B	C	D	E	F	Bracket-upper hinge, RH
38A	241761302	A	B	C	D	E	F	Bracket-upper hinge, LH
40	241778003	A	B	-	-	-	-	Cover-upper hinge, black, RH
40	241778009	-	-	C	D	-	-	Cover-upper hinge, grey, RH
40	241778005	-	-	-	-	E	F	Cover-upper hinge, white, RH
40A	241778004	A	B	-	-	-	-	Cover-upper hinge, black, LH
40A	241778010	-	-	C	D	-	-	Cover-upper hinge, grey, LH
40A	241778006	-	-	-	-	E	F	Cover-upper hinge, white, LH

Functional Parts
* Non-Illustrated Parts

CABINET

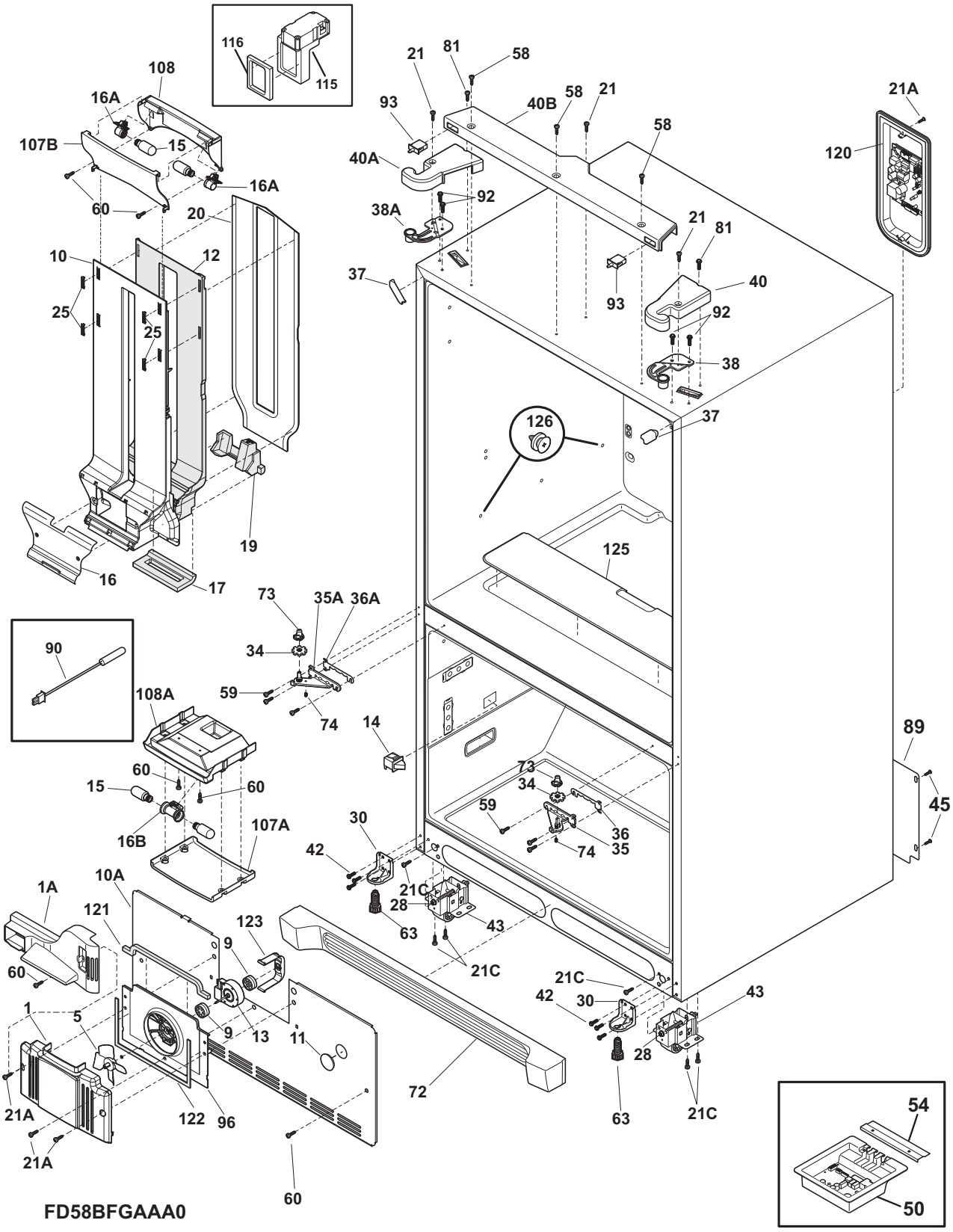
116
115
108
16A
107B
15
16A
60
20
10
12
25
25
19
16
17
21
81
58
93
40B
58
21
58
21A
120
40A
92
38A
21
81
37
93
40
92
38
37
126
125
73
35A
36A
34
59
74
90
108A
14
89
60
15
60
73
34
59
45
16B
107A
30
36
35
74
42
21C
28
43
63
10A
1A
121
123
9
21C
60
21C
42
30
43
1
5
9
13
11
28
72
21A
122
96
63
21C
21A
60
54
50
FD58BFGAAA0

CABINET

Model Index:
A FGUB2642L (FGUB2642LE0)
B FGUB2642L (FGUB2642LE1)
C FGUB2642L (FGUB2642LF0)
D FGUB2642L (FGUB2642LF1)
E FGUB2642L (FGUB2642LP0)
F FGUB2642L (FGUB2642LP1)

POS. NO	PART NO.							DESCRIPTION
40B	241862402	A	B	-	-	-	-	Cover-upper hinge, black, center
40B	241862405	-	-	C	D	-	-	Cover-upper hinge, grey, center
40B	241862403	-	-	-	-	E	F	Cover-upper hinge, white, center
42	240578902	A	B	C	D	E	F	Screw, hex head, 1/4-20 x 5/8
43	240335006	A	B	C	D	E	F	Roller Assy, front, (2)
45	241500303	A	B	C	D	E	F	Screw, hex washer head, 8-18AB x 0.500
50	241996319	A	B	C	D	E	F	Board-main power
54	241532401	A	B	C	D	E	F	Channel
58	241853202	A	B	C	D	E	F	Screw
59	240442706	A	B	C	D	E	F	Screw-#10-32 X 3/4, zinc
60	218362501	A	B	C	D	E	F	Screw, hex washer head, 8-18AB x 1.250, spacer, (2)
63	216396900	A	B	C	D	E	F	Screw, leveling foot, plastic, adjustable
72	242054802	A	B	-	-	-	-	Grille/Kickplate, black
72	242054801	-	-	C	D	-	-	Grille/Kickplate
72	242054803	-	-	-	-	E	F	Grille/Kickplate, white
73	242075701	A	B	C	D	E	F	Cam-lower hinge
74	242026701	A	B	C	D	E	F	Screw, #6-32 x 9/16
81	242025601	A	B	C	D	E	F	Screw, hex head, #10-32 x 3/8
89	241733905	A	B	C	D	E	F	Cover-access, w/label
90	240597203	A	B	C	D	E	F	Sensor
92	241710601	A	B	C	D	E	F	Screw, hex washer hd, 1/4 x 7/8, hinge mtg
93	241835502	A	B	-	-	-	-	Switch-light
93	241835505	-	-	C	D	-	-	Switch-light, grey
93	241835501	-	-	-	-	E	F	Switch-light, white
96	241860601	A	B	C	D	E	F	Shroud-evap fan mtg
107A	241971601	A	B	C	D	E	F	Shield-light, frzr
107B	241971202	A	B	C	D	E	F	Shield-light, upper
108	241971401	A	B	C	D	E	F	Cover-wiring, top air duct
108A	241971801	A	B	C	D	E	F	Cover-wiring, freezer light
115	241518501	A	B	C	D	E	F	Damper, motorized
116	241518601	A	B	C	D	E	F	Seal-damper, foam
120#	241956703	A	-	C	-	E	-	Board Assembly, control, ice maker
120#	241956714	-	B	-	D	-	F	Board-LED power
121	241860103	A	-	C	-	E	-	Gasket-evap, upper
121	241860112	-	B	-	D	-	F	Gasket-evap, upper
122	241860102	A	-	C	-	E	-	Gasket-evap, bottom
122	241860111	-	B	-	D	-	F	Gasket-evap, bottom
123	241517701	A	B	C	D	E	F	Clip, evap fan motor
125	242071201	A	B	C	D	E	F	Cover, sump
126	242081301	A	B	C	D	E	F	Screw-shoulder
*	240479601	A	B	C	D	E	F	Plug, button, cab liner holes
*	241969001	A	B	C	D	E	F	Cap, screw
*	242015904	A	B	C	D	E	F	Harness-wiring
*	242025201	A	B	C	D	E	F	Pipe, foam
* #	5303918416	A	B	C	D	E	F	Thermistor kit, T-3 suction lin, icemaker

Functional Parts
* Non-Illustrated Parts

SHELVES

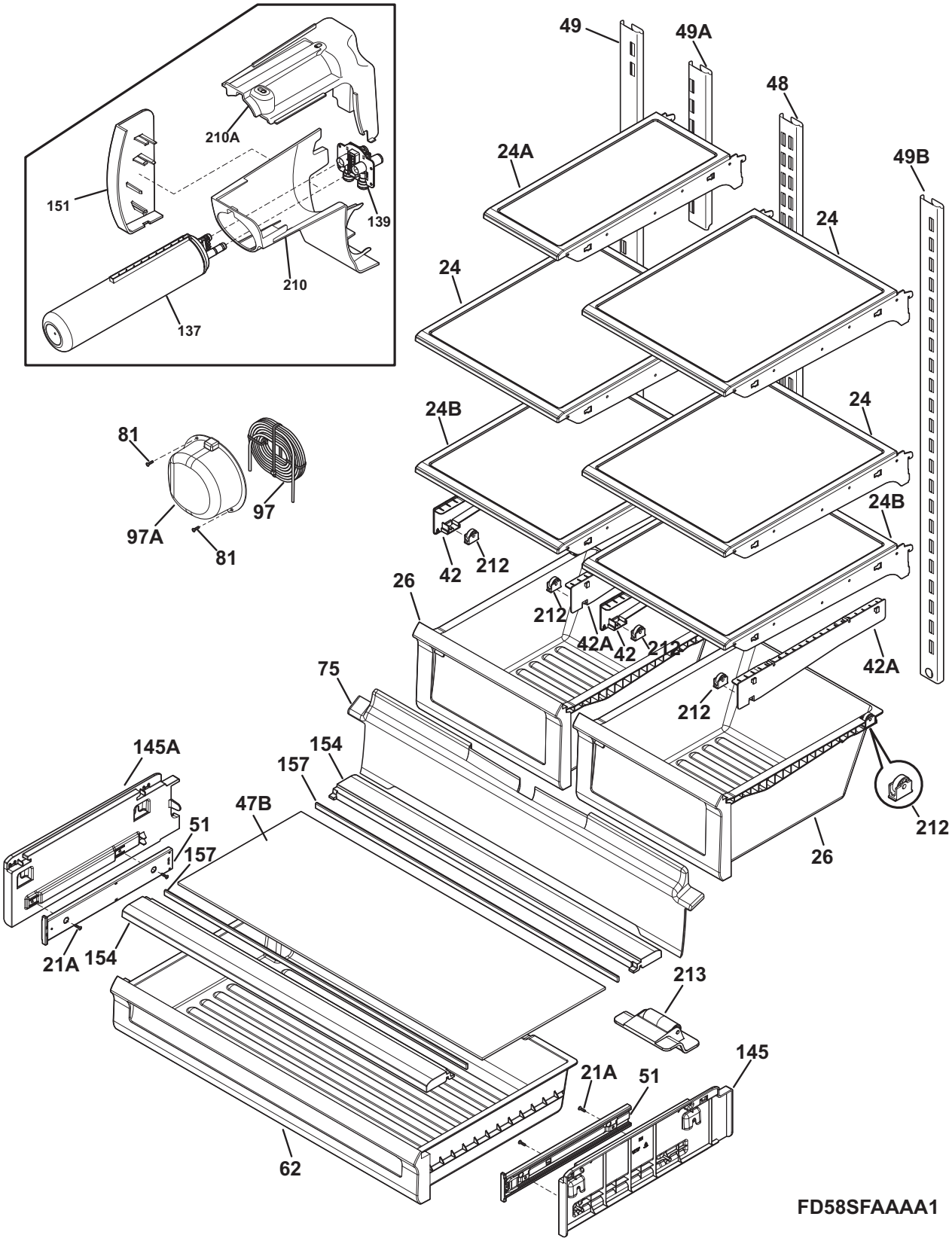
49
49A
48
49B
24A
24
24
24
24B
24B
210A
151
139
210
137
81
97
97A
81
42
212
26
212
42A
42
212
42A
212
75
212
145A
154
157
47B
51
157
21A
154
213
145
21A
51
62
26
FD58SFAAAA1

SHELVES

Model Index:
A FGUB2642L (FGUB2642LE0)
B FGUB2642L (FGUB2642LE1)
C FGUB2642L (FGUB2642LF0)
D FGUB2642L (FGUB2642LF1)
E FGUB2642L (FGUB2642LP0)
F FGUB2642L (FGUB2642LP1)

POS. NO	PART NO.							DESCRIPTION
21A	241953902	A	B	C	D	E	F	Screw, #8 - 18 X .380, 3
24	242068701	A	B	C	D	E	F	Shelf-"Spill-Safe", cantilever, sliding
24A	242068702	A	B	C	D	E	F	Shelf-"Spill-Safe", cantilever, 1/4 width, sliding
24B	242068703	A	B	C	D	E	F	Shelf-"Spill-Safe", fixed
26	241801801	A	B	C	D	E	F	Pan-crisper, (2)
42	242067901	A	B	C	D	E	F	Support, crspr pan rolle
42*	241953901	A	B	C	D	E	F	Screw, #8-18
42A	242067801	A	B	C	D	E	F	Support, crspr pan rolle
47B	242082301	A	B	C	D	E	F	Glass, deli cover
48	242070601	A	-	C	-	E	-	Channel-shelf mtg, center
48	242122101	-	B	-	D	-	F	Channel-shelf mtg, center
49	242070401	A	-	C	-	E	-	Channel-shelf mtg, side, LH
49	242122201	-	B	-	D	-	F	Channel-shelf mtg, side, LH
49A	242077501	A	-	C	-	E	-	Channel-shelf mtg, center, icemaker shelf
49A	242122001	-	B	-	D	-	F	Channel-shelf mtg, center, icemaker shelf
49B	242070501	A	-	C	-	E	-	Channel-shelf mtg, side, RH
49B	242122301	-	B	-	D	-	F	Channel-shelf mtg, side, RH
51	242065301	A	B	C	D	E	F	Slide-deli
62	242096801	A	B	C	D	E	F	Pan-deli
75	242072702	A	B	C	D	E	F	Shield-light, refr
81	5304455650	A	B	C	D	E	F	Screw, hex washer head, 8-15A x 0.625, Low Profile
97	242082001	A	B	C	D	E	F	Water Tank
97A	242117301	A	B	C	D	E	F	Cover-water tank
137	241791601	A	B	C	D	E	F	Filter-water, carbon
139	242009601	A	B	C	D	E	F	Base-water filter
145	242082201	A	B	C	D	E	F	Support, rail
145A	242082202	A	B	C	D	E	F	Support, rail
151	242069701	A	B	C	D	E	F	Cover-water filter
154	242082401	A	B	C	D	E	F	Support
154*	242015001	A	B	C	D	E	F	Screw, #10 8-19 x 1/2
157	241872201	A	B	C	D	E	F	Beam-crisper cover
210	241983805	A	B	C	D	E	F	Housing-water filtr
210A	241998302	A	B	C	D	E	F	Mount-water filter
212	5304479194	A	B	C	D	E	F	Roller Assembly, crisper pan
213	242010901	A	B	C	D	E	F	Roller Assy, deli pan
*	242110215	A	B	C	D	E	F	Energy Guide

COOLING SYSTEM

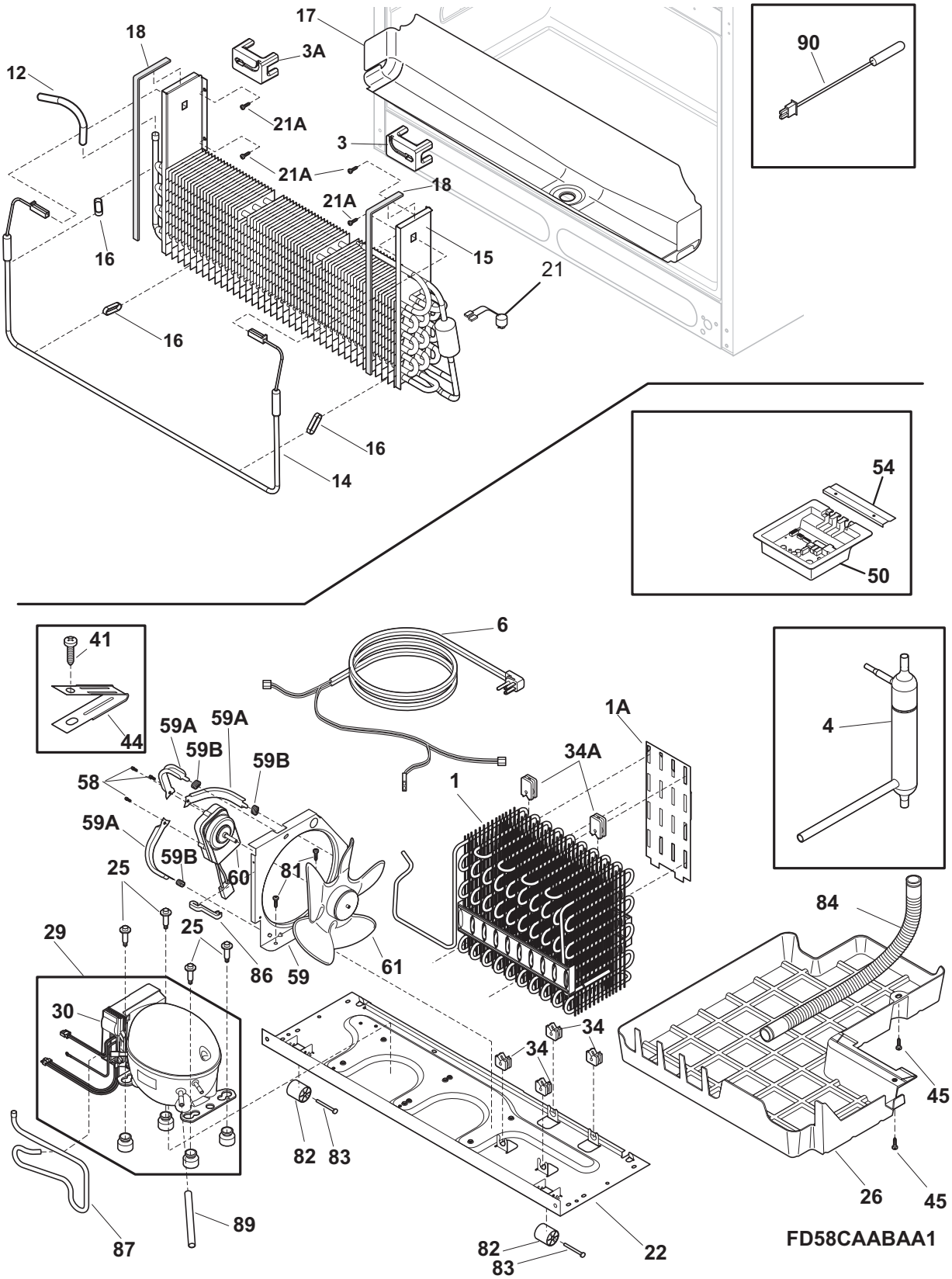

COOLING SYSTEM

Model Index:
A FGUB2642L (FGUB2642LE0)
B FGUB2642L (FGUB2642LE1)
C FGUB2642L (FGUB2642LF0)
D FGUB2642L (FGUB2642LF1)
E FGUB2642L (FGUB2642LP0)
F FGUB2642L (FGUB2642LP1)

POS. NO	PART NO.							DESCRIPTION
1 #	241862901	A	B	C	D	E	F	Condenser
1*	242009501	A	B	C	D	E	F	Clip, retainer
1A	241987301	A	B	C	D	E	F	Deflector-air, condenser
3	241838401	A	B	C	D	E	F	Block-evap coil, styrofoam insul, RH
3A	241838402	A	B	C	D	E	F	Block-evap coil, styrofoam insul, LH
4	241863101	A	B	C	D	E	F	Drier-filter, w/process tube
6 #	241516901	A	B	C	D	E	F	Cord-service
6* #	242102101	A	B	C	D	E	F	Harness-wiring, machine compt
12	242036702	A	B	C	D	E	F	Tube-jumper, evaporator
14 #	5303918410	A	B	C	D	E	F	Defrost Heater Kit, 28'
15 #	5303918406	A	B	C	D	E	F	Evaporator Kit
16	5308000110	A	B	C	D	E	F	Strap-evap/heater, aluminum, (2)
17	242084201	A	B	C	D	E	F	Trough-drain
18	241860101	A	B	C	D	E	F	Gasket, closed cell
21 #	242046001	A	B	C	D	E	F	Thermostat-defrost
21A	218362501	A	B	C	D	E	F	Screw, hex washer head, 8-18AB x 1.250, spacer, (2)
22	241602112	A	B	C	D	E	F	Base-compressor, w/rollers
22*	218252201	A	B	C	D	E	F	Screw, #8 truss hd, 10-32CA x 0.500
25	240491503	A	B	C	D	E	F	Screw-compressor mtg, 1/4-28 x 1.16, (4)
26	241920603	A	B	C	D	E	F	Pan-defrost
29 #	5303918437	A	B	C	D	E	F	Compressor Kit
30 #	241577505	A	B	C	D	E	F	Invertor
34	241929901	A	B	C	D	E	F	Grommet-cond mtg, (4)
34A	241929902	A	B	C	D	E	F	Grommet-cond mtg, (4)
41	240555002	A	B	C	D	E	F	Screw-#8-32 X 3/8
44	215174700	A	B	C	D	E	F	Clamp-service cord, strain relief, galv steel
45	5304455650	A	B	C	D	E	F	Screw, hex washer head, 8-15A x 0.625, Low Profile
50	241996319	A	B	C	D	E	F	Board-main power
50*#	242102001	A	B	C	D	E	F	Harness-wiring
54	241532401	A	B	C	D	E	F	Channel
58	240433203	A	B	C	D	E	F	Screw, hex washer head, 8-18 x 3/8
59	240315502	A	B	C	D	E	F	Shroud-cond fan
59*	240346701	A	B	C	D	E	F	Tape-foam seal, shroud
59A	240346501	A	B	C	D	E	F	Bracket-support, cond mtr, (3)
59B	240346601	A	B	C	D	E	F	Grommet-bracket, (3)
60	241584301	A	B	C	D	E	F	Motor-condenser fan
61	241639501	A	B	C	D	E	F	Blade-condenser fan
81	240359403	A	B	C	D	E	F	Screw-fan shroud, (2)
82	5304418225	A	B	C	D	E	F	Roller, compressor base, rear, (2)
83	5304455655	A	B	C	D	E	F	Rivet, flat head, 1/4 OD x 1-3/4, roller pin
84	241830902	A	B	C	D	E	F	Tube-drain, lower
84*	242036801	A	B	C	D	E	F	Clip-tube, drain
86	240409302	A	B	C	D	E	F	Spacer-cond tube, black
87	241846302	A	B	C	D	E	F	Tube-suction, jumper
89	215346900	A	B	C	D	E	F	Tube-process

Functional Parts
* Non-Illustrated Parts

COOLING SYSTEM

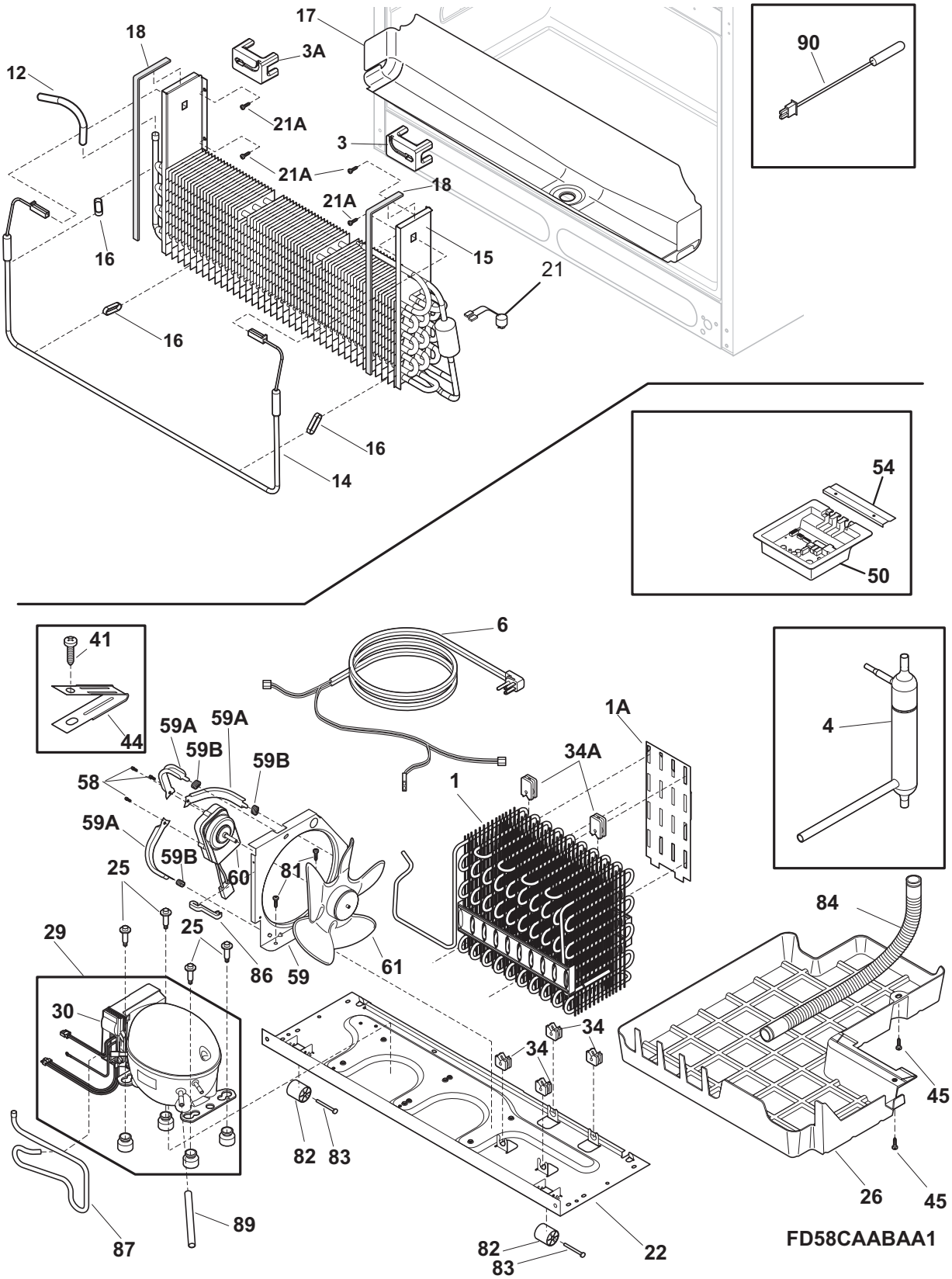

COOLING SYSTEM

Model Index:
A FGUB2642L (FGUB2642LE0)
B FGUB2642L (FGUB2642LE1)
C FGUB2642L (FGUB2642LF0)
D FGUB2642L (FGUB2642LF1)
E FGUB2642L (FGUB2642LP0)
F FGUB2642L (FGUB2642LP1)

POS. NO	PART NO.							DESCRIPTION
90	240597203	A	B	C	D	E	F	Sensor
90*	241842301	A	B	C	D	E	F	Cap-thermistor
*	3205266	A	B	C	D	E	F	Edge Protector, wiring harness
*	218515403	A	B	C	D	E	F	Clip-grille
*	241510904	A	B	C	D	E	F	Harness-dispenser, grounding
*	241947701	A	B	C	D	E	F	Spacer, heat exchanger
*	5303918416	A	B	C	D	E	F	Thermistor kit, T-3 suction lin, icemaker
*	5303918445	A	B	C	D	E	F	Heat Exchanger Kit, suction line, service
* #	5303918446	A	B	C	D	E	F	Heat Exchanger, icemaker
*	5303918428	A	B	C	D	E	F	Hot Tube Repair Kit, service

Functional Parts
* Non-Illustrated Parts

CONTROLS & ICE DISPENSER

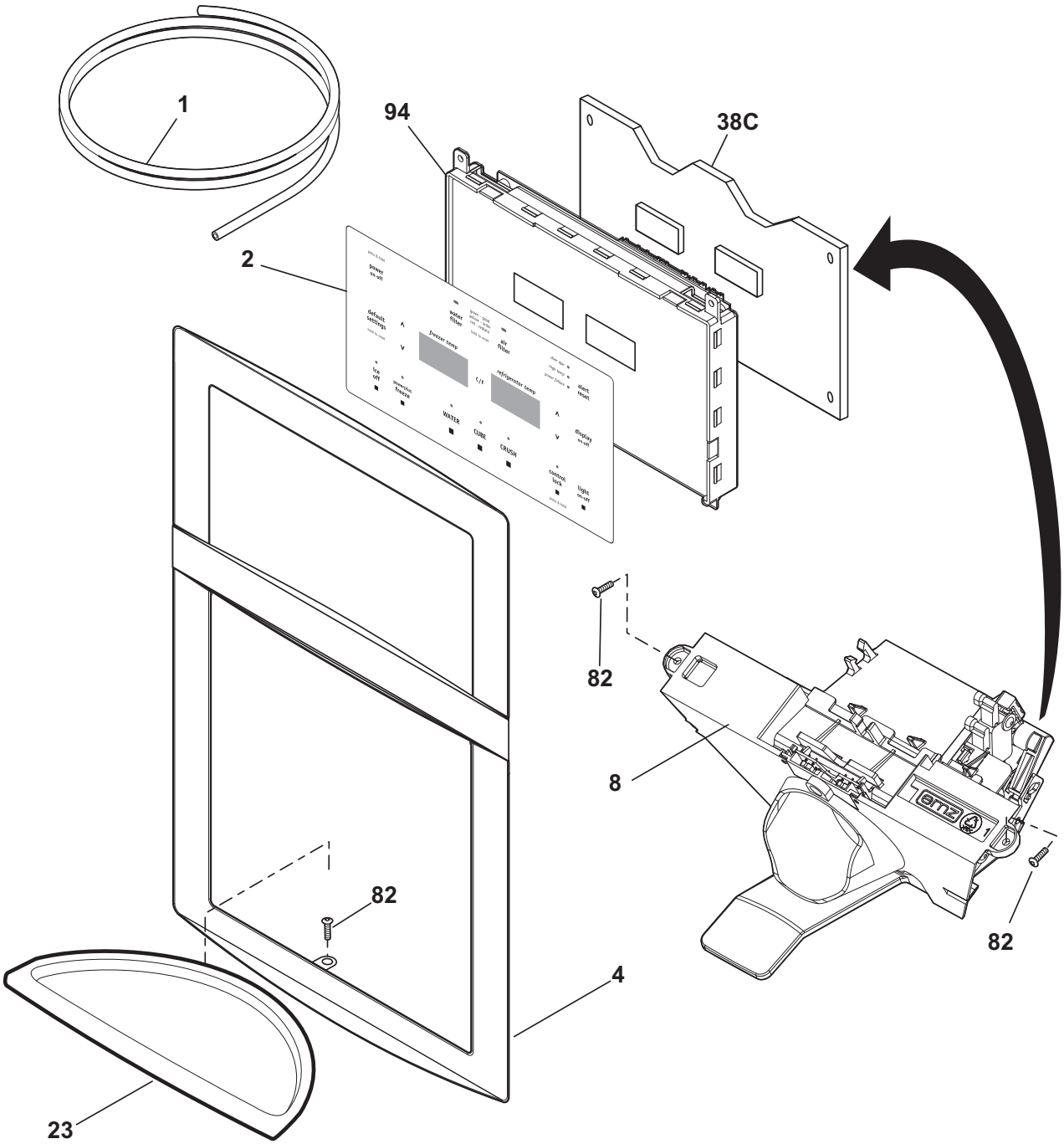

FD58XFCBAA0

CONTROLS & ICE DISPENSER

Model Index:
A FGUB2642L (FGUB2642LE0)
B FGUB2642L (FGUB2642LE1)
C FGUB2642L (FGUB2642LF0)
D FGUB2642L (FGUB2642LF1)
E FGUB2642L (FGUB2642LP0)
F FGUB2642L (FGUB2642LP1)

POS. NO	PART NO.							DESCRIPTION
1	218976424	A	B	C	D	E	F	Tube-water inlet, 64.00", yellow
1*	241920101	A	B	C	D	E	F	Tube-water inlet, green, valve to I.M.
1*	241965901	A	B	C	D	E	F	Tube-water, formed, 64.86"
2 #	242035601	A	B	C	D	-	-	Switch-membrane
2 #	242035602	-	-	-	-	E	F	Switch-membrane
4	242089602	A	B	-	-	-	-	Cover-module, black
4	242089603	-	-	C	D	-	-	Cover-module, gray
4	242089601	-	-	-	-	E	F	Cover-module, white
8	242074201	A	B	-	-	-	-	Module-dispenser, black
8	242074204	-	-	C	D	-	-	Module-dispenser
8	242074202	-	-	-	-	E	F	Module-dispenser, white
23	242034002	A	B	-	-	-	-	Drip Tray, black
23	242034004	-	-	C	D	-	-	Drip Tray, gray
23	242034001	-	-	-	-	E	F	Drip Tray, white
38C#	241973706	A	B	C	D	E	F	Board-control
82	241953902	A	B	C	D	E	F	Screw, #8 - 18 X .380, 3
94	242034101	A	B	C	D	E	F	Housing-control
*	241510904	A	B	C	D	E	F	Harness-dispenser, grounding
*	242105401	A	B	C	D	E	F	Chute-ice
*	5303918371	A	B	C	D	E	F	Dispenser heater kit, 115

Functional Parts
* Non-Illustrated Parts

ICE CONTAINER

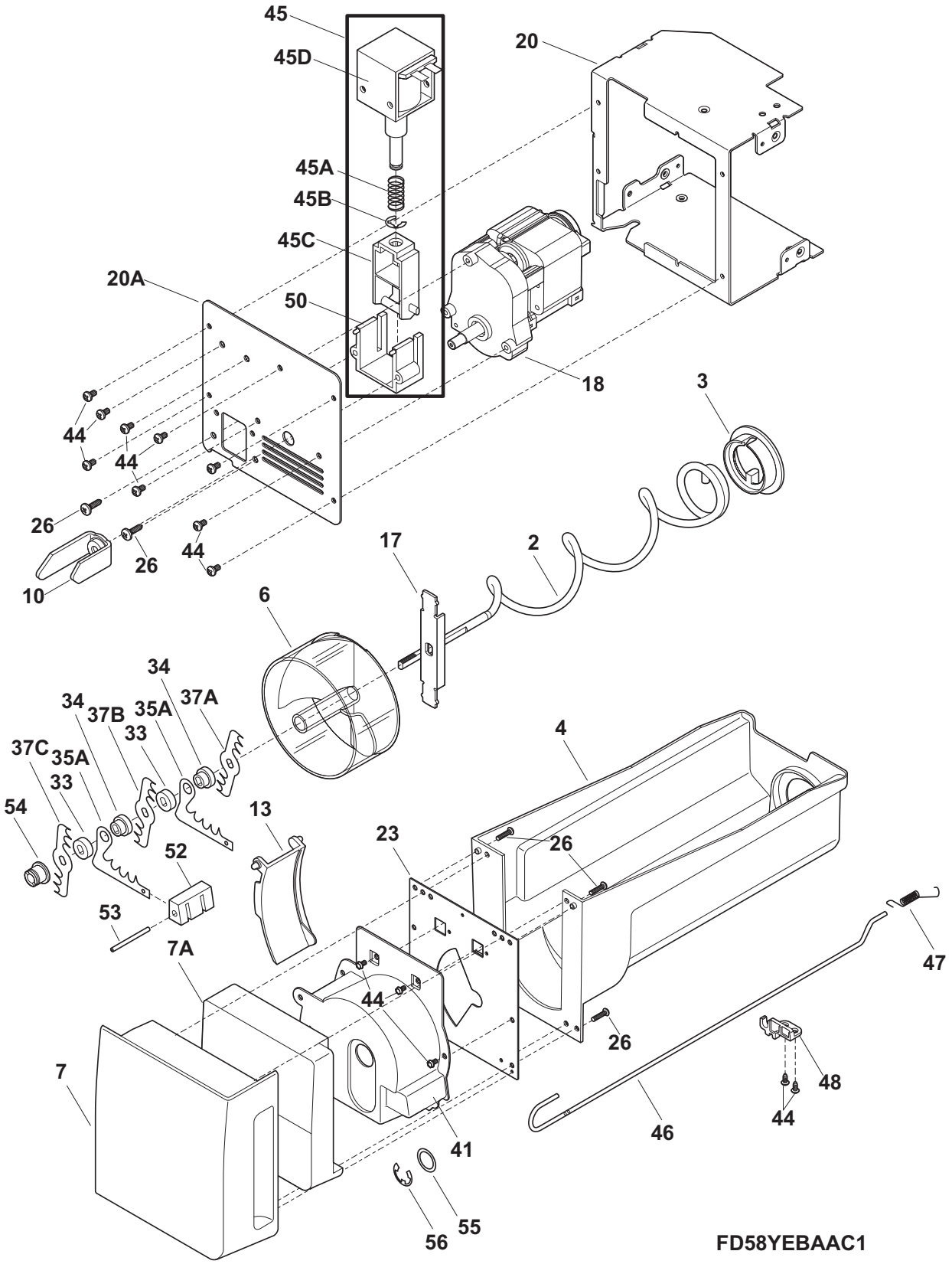

ICE CONTAINER

Model Index: A FGUB2642L (FGUB2642LE0)
B FGUB2642L (FGUB2642LE1)
C FGUB2642L (FGUB2642LF0)
D FGUB2642L (FGUB2642LF1)
E FGUB2642L (FGUB2642LP0)
F FGUB2642L (FGUB2642LP1)

POS. NO	PART NO.							DESCRIPTION
2	241829401	A	B	C	D	E	F	Auger-ice
3	241830201	A	B	C	D	E	F	Cam-drive
4	241816801	A	B	C	D	E	F	Container-ice, bucket only
6	241829801	A	B	C	D	E	F	Drum-ice disp
7	241829702	A	B	C	D	E	F	Front-ice container
7A	241844201	A	B	C	D	E	F	Insulation
10	241829001	A	B	C	D	E	F	Bar-drive
13	241829901	A	B	C	D	E	F	Gate
17	241830601	A	B	C	D	E	F	Drive Blade
18 #	241816601	A	B	C	D	E	F	Motor-auger
18*#	241843301	A	B	C	D	E	F	Harness-wiring, high voltage, auger motor
20	241828901	A	B	C	D	E	F	Cover-motor
20A	241843101	A	B	C	D	E	F	Cover-motor, front
23	241829501	A	B	C	D	E	F	Plate-front
26	215503205	A	B	C	D	E	F	Screw, cr pan hd, 10-16 x 0.500
33	241684801	A	B	C	D	E	F	Spacer
34	241689801	A	B	C	D	E	F	Spacer
35A	241830401	A	B	C	D	E	F	Fixed Blade, round
37A	241830301	A	B	C	D	E	F	Blade, crusher #1
37B	241830302	A	B	C	D	E	F	Blade, crusher #2
37C	241830303	A	B	C	D	E	F	Blade, crusher #3
41	241830001	A	B	C	D	E	F	Housing-crusher
44	218359202	A	B	C	D	E	F	Screw, pan head, 8-32 x 0.250
44*	242030601	A	B	C	D	E	F	Washer, star/lock
45 #	241675701	A	B	C	D	E	F	Solenoid Assy, 115V
45A	241675901	A	B	C	D	E	F	Spring-solenoid
45B	241676001	A	B	C	D	E	F	E-Ring-solenoid
45C	241676101	A	B	C	D	E	F	Actuator-solenoid
45D#	241675801	A	B	C	D	E	F	Solenoid, 115V
46	241817901	A	B	C	D	E	F	Control Rod
47	241839001	A	B	C	D	E	F	Spring-control rod
48	241830101	A	B	C	D	E	F	Bracket-control
50	241675601	A	B	C	D	E	F	Guide-solenoid
52	241830701	A	B	C	D	E	F	Spacer-fixed blades
53	241869601	A	B	C	D	E	F	Pin-spiral, fixed blades
54	241829601	A	B	C	D	E	F	Nut-auger
55	241690301	A	B	C	D	E	F	Washer
56	241690201	A	B	C	D	E	F	E-ring
*	241690601	A	B	C	D	E	F	Screw, #10-16 Hilo
*	242007101	A	B	C	D	E	F	Latch
*	241829303	A	B	C	D	E	F	Ice Container Assy, w/moving parts

Functional Parts
* Non-Illustrated Parts

ICE MAKER

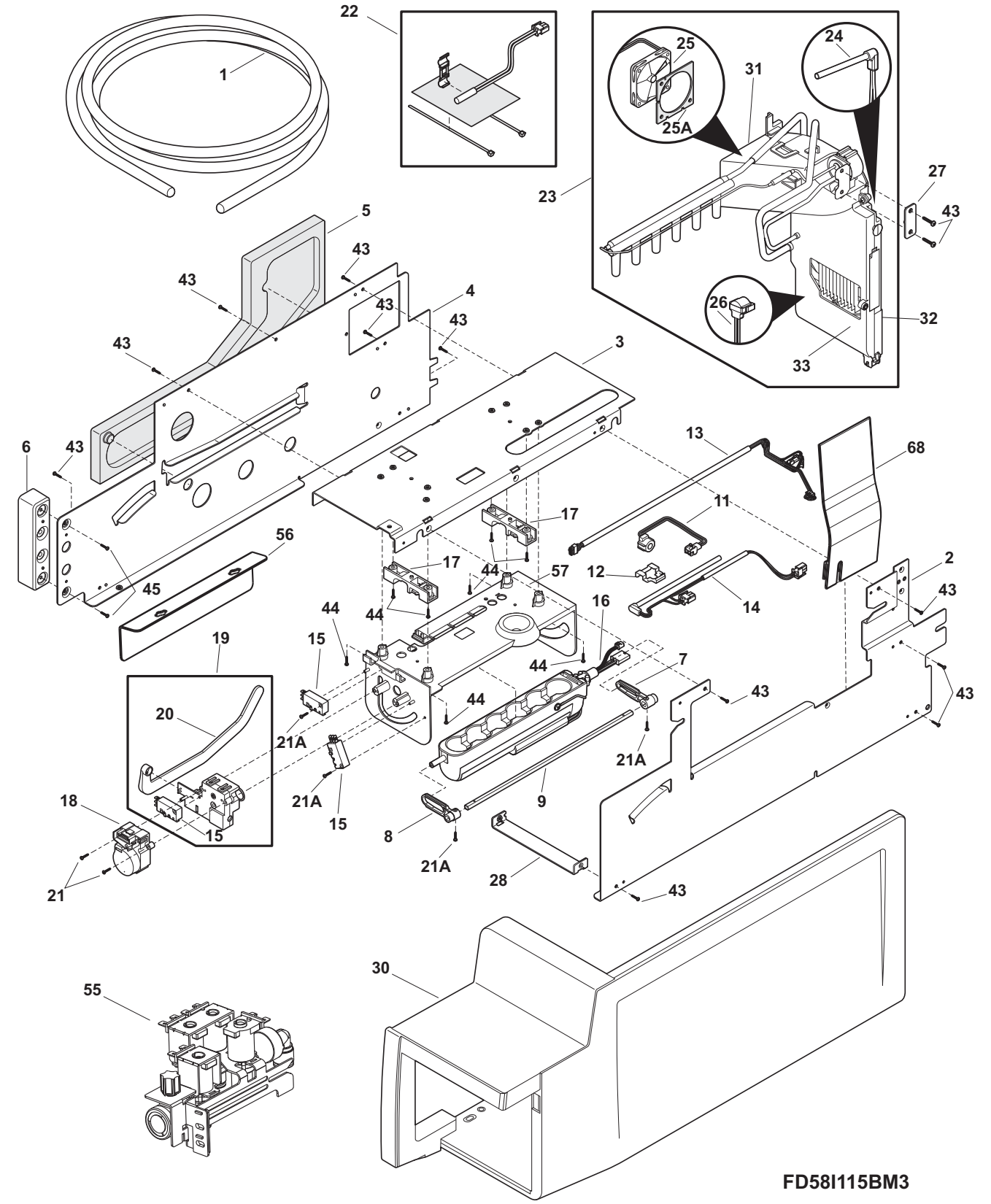
22
1
25
24
31
25A
23
27
43
5
43
43
4
43
43
26
32
43
3
33
6
43
13
68
11
17
56
17
44
57
12
2
45
16
14
43
44
44
19
15
44
7
43
43
20
44
21A
21A
9
18
21A
15
15
8
21A
28
21
43
30
55
FD58I115BM3

ICE MAKER

Model Index: A FGUB2642L (FGUB2642LE0)
B FGUB2642L (FGUB2642LE1)
C FGUB2642L (FGUB2642LF0)
D FGUB2642L (FGUB2642LF1)
E FGUB2642L (FGUB2642LP0)
F FGUB2642L (FGUB2642LP1)

POS. NO	PART NO.							DESCRIPTION
1	218976424	A	B	C	D	E	F	Tube-water inlet, 64.00", yellow
1*	218976432	A	B	C	D	E	F	Tube-water, brown/tan
1*	241920101	A	B	C	D	E	F	Tube-water inlet, green, valve to I.M.
1*	241965901	A	B	C	D	E	F	Tube-water, formed, 64.86"
1*	242041804	A	B	C	D	E	F	Tube-water inlet, yellow, inlet valve, to icemaker
1*	242082103	A	B	C	D	E	F	Tube-water
1*	242082104	A	B	C	D	E	F	Tube-water
2	241937301	A	B	C	D	E	F	Frame-icemaker, RH
3	241828501	A	B	C	D	E	F	Frame-icemaker, top
4	241937501	A	B	C	D	E	F	Frame-icemaker, LH
5	241870701	A	B	C	D	E	F	Duct-air
6	241954001	A	B	C	D	E	F	Spacer, icemaker
7	241939001	A	B	C	D	E	F	Bracket, ice tray
8	241827701	A	B	C	D	E	F	Bracket, ice tray
9	241841701	A	B	C	D	E	F	Shaft, motor, icemaker
11 #	241983101	A	B	C	D	E	F	Bimetal-heater, harvest
12	241997601	A	B	C	D	E	F	Clamp, strain relief
13 #	241921501	A	B	C	D	E	F	Harness-wiring, ice maker
14	241983201	A	B	C	D	E	F	Heater, harvest, 115 V
15 #	241870101	A	B	C	D	E	F	Switch
16	241827901	A	B	C	D	E	F	Tray-ice
17	241828101	A	B	C	D	E	F	Bracket-evap coil
18 #	241817701	A	B	C	D	E	F	Motor-ice maker
18*	241820701	A	B	C	D	E	F	Harness-wiring, icmkr
19	241939901	A	B	C	D	E	F	Shut-off Arm Assembly
20	241839501	A	B	C	D	E	F	Shut-off Arm
21	242024101	A	B	C	D	E	F	Screw
21A	242024401	A	B	C	D	E	F	Screw
22 #	5303918416	A	B	C	D	E	F	Thermistor kit, T-3 suction lin, icemaker
23	5303918444	A	B	C	D	E	F	Evaporator Kit, ice maker
24 #	241962501	A	B	C	D	E	F	Heater-defrost, icemaker
25 #	241870801	A	B	C	D	E	F	Fan
25*	241870304	A	B	C	D	E	F	Screw
25A	241962301	A	B	C	D	E	F	Gasket-evap fan, icemaker
26	241962601	A	B	C	D	E	F	Thermistor
27	241963401	A	B	C	D	E	F	Gasket, ice maker
28	241828701	A	B	C	D	E	F	Brace, icemaker, front
30	242105601	A	B	C	D	E	F	Cover, icmkr & bucket
31	241925102	A	B	C	D	E	F	Shroud-evap fan mtg, ice maker
32	241925201	A	B	C	D	E	F	Cover, rear, i/mk evaporator
33	241924701	A	B	C	D	E	F	Cover, front, i/mk evaporator
43	218359202	A	B	C	D	E	F	Screw, pan head, 8-32 x 0.250
44	241870406	A	B	C	D	E	F	Screw
45	241641501	A	B	C	D	E	F	Screw
55 #	242102201	A	B	C	D	E	F	Valve-water, 4 position, 115 V

Functional Parts
* Non-Illustrated Parts

ICE MAKER

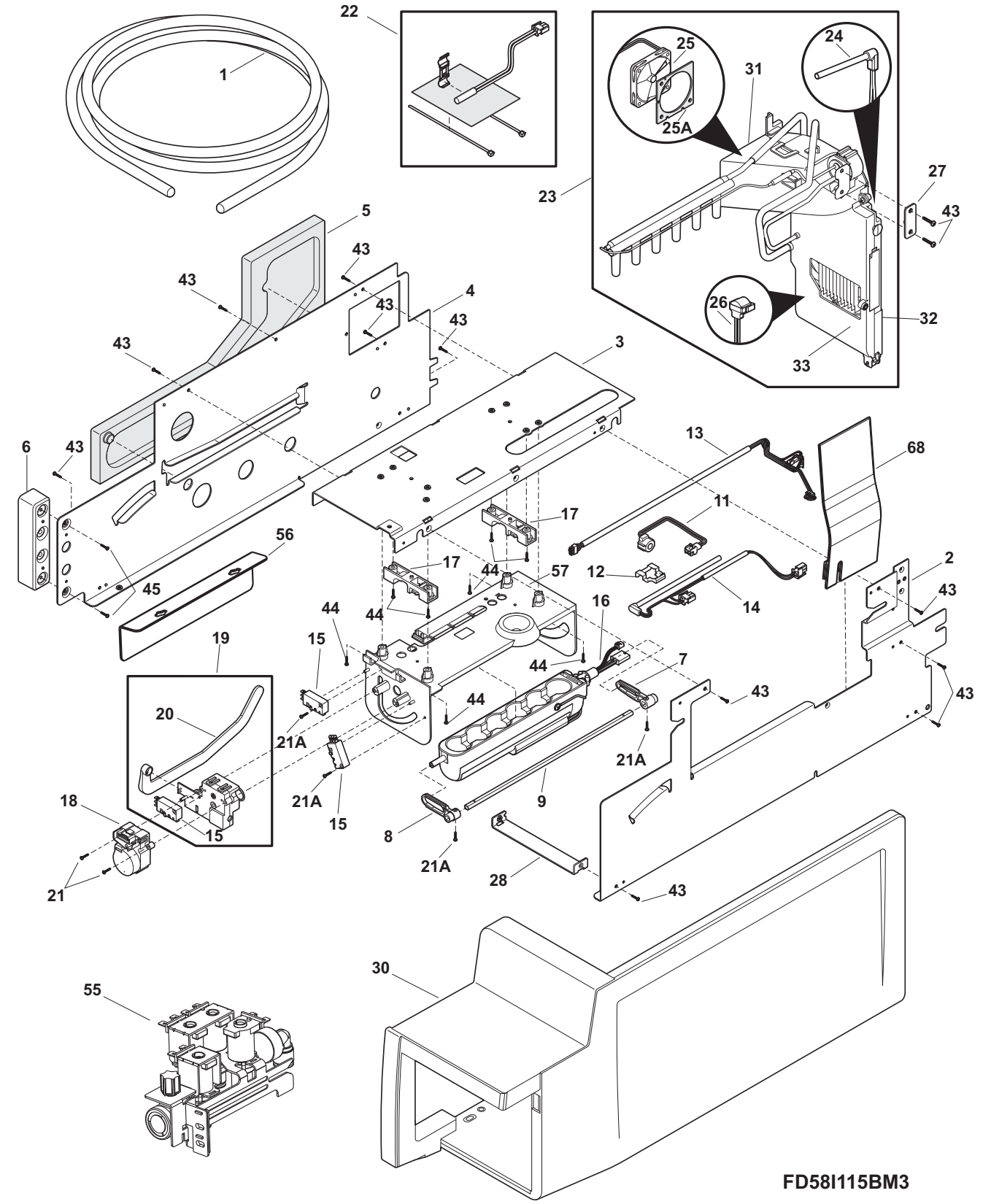
22
1
25
24
31
25A
23
27
43
5
43
43
4
43
43
26
32
43
3
33
6
43
13
68
11
17
56
17
44
57
12
2
45
16
14
43
44
44
19
15
44
7
43
43
20
44
21A
21A
9
18
21A
15
15
8
21A
28
21
43
30
55
FD58I115BM3

ICE MAKER

Model Index:
A FGUB2642L (FGUB2642LE0)
B FGUB2642L (FGUB2642LE1)
C FGUB2642L (FGUB2642LF0)
D FGUB2642L (FGUB2642LF1)
E FGUB2642L (FGUB2642LP0)
F FGUB2642L (FGUB2642LP1)

POS. NO	PART NO.							DESCRIPTION
55*	218709101	A	B	C	D	E	F	Screw, hex head, 10-32 x 0.500
55*	240363602	A	B	C	D	E	F	Screw-shoulder
56	241865501	A	B	C	D	E	F	Rail, ice maker, RH, vertical
57	241816901	A	B	C	D	E	F	Bracket, evap assembly
68	241969701	A	-	C	-	E	-	Deflector-water
68	241969702	-	B	-	D	-	F	Deflector-water
*	242105401	A	B	C	D	E	F	Chute-ice
*	240396801	A	B	C	D	E	F	Clamp, tube/wiring, nylon, black/natural
*	242015401	A	B	C	D	E	F	Screw, 8-18B x 0.500
*	242103001	A	B	C	D	E	F	Connector-water, straight
*	5304453921	A	B	C	D	E	F	Clamp-cable
* #	5303918467	A	B	C	D	E	F	Heater Kit, EEV
*	242087401	A	B	C	D	E	F	• Heater
* #	5303918446	A	B	C	D	E	F	Heat Exchanger, icemaker

Functional Parts
* Non-Illustrated Parts

WIRING DIAGRAM

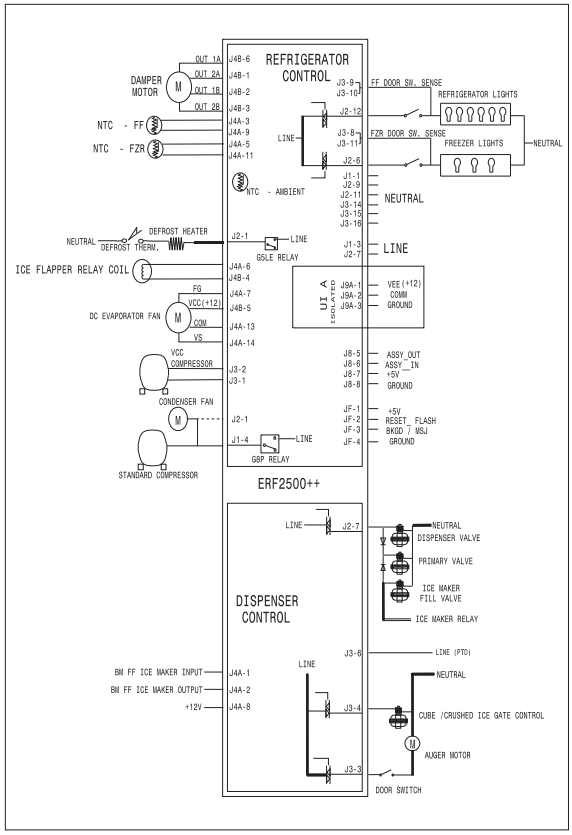

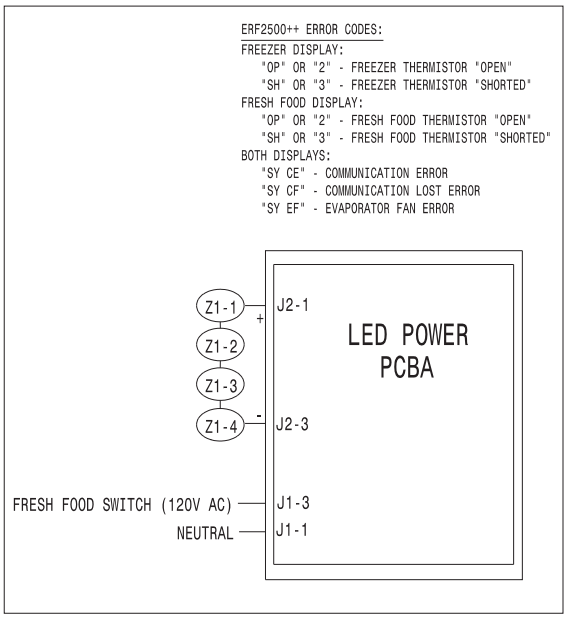

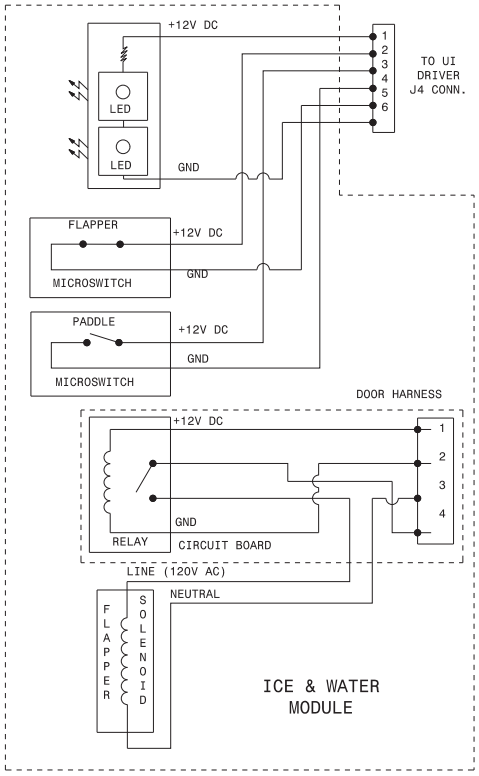

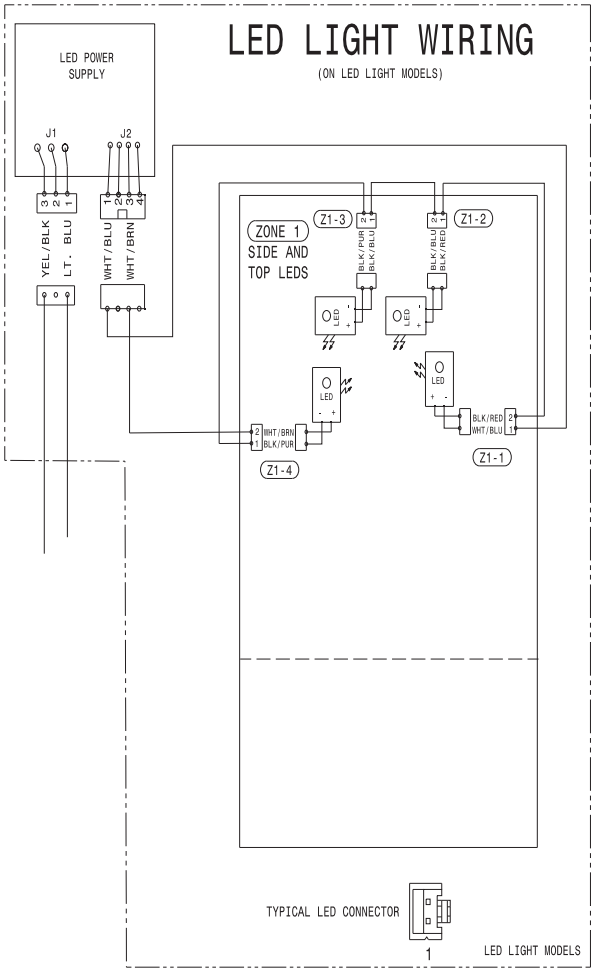
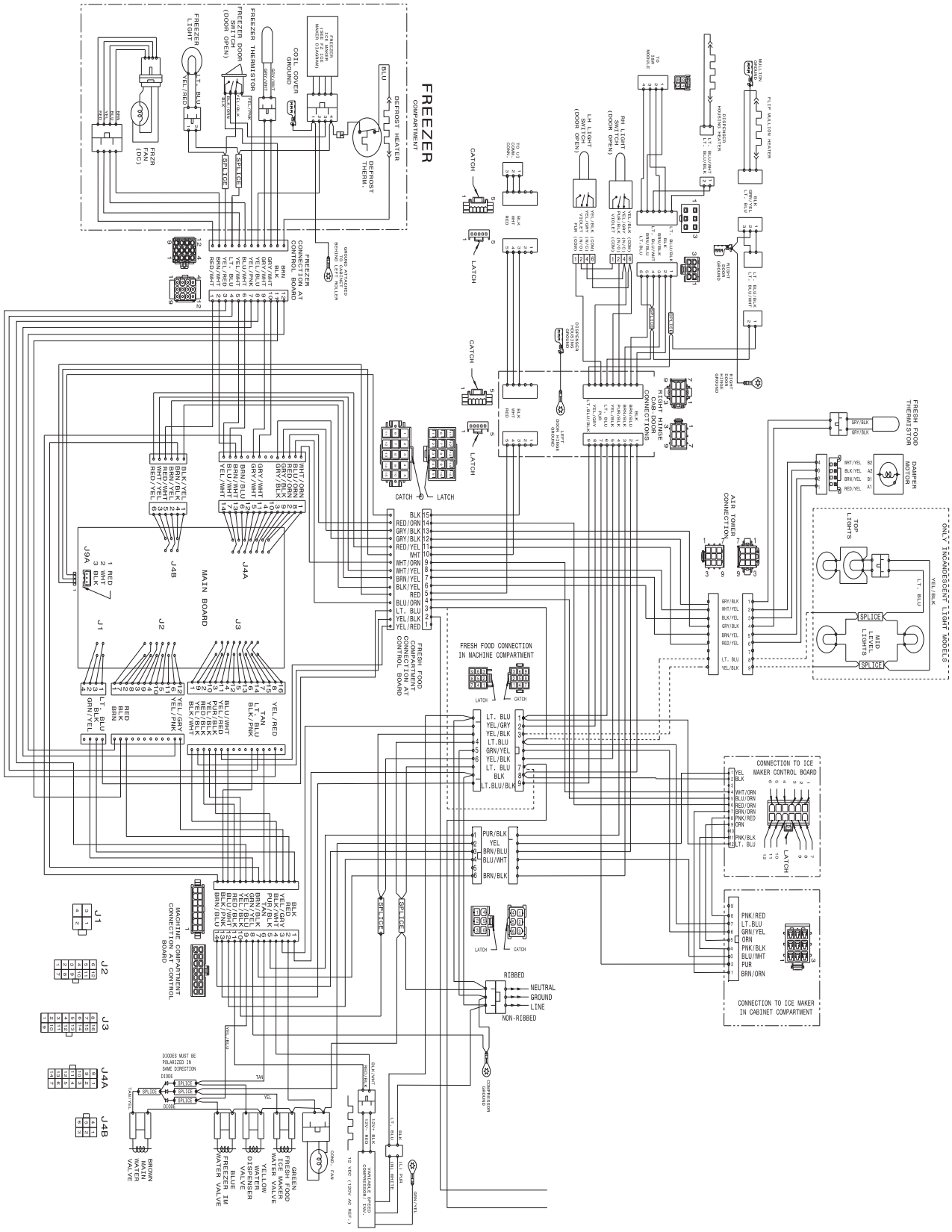
WIRING DIAGRAM